Cerna Series Microscopy Platform

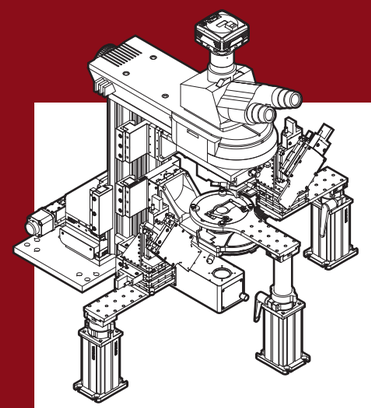

Cerna Rig CRE1003
This configuration is designed for electrophysiology experiments and includes rigid stands for micromanipulators.

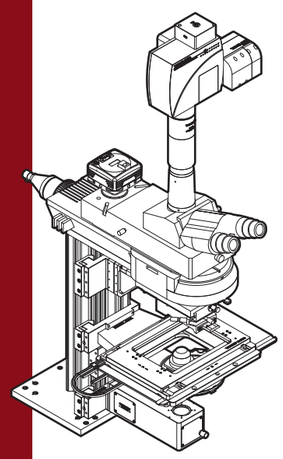

Cerna Rig CRC1002
This confocal microscope uses a dual camera port and fast XY Scanning stage.

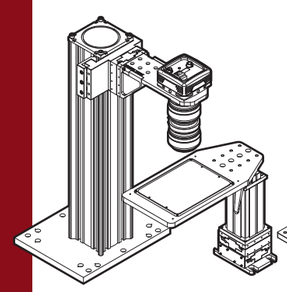

Cerna Rig CRF1001
The CFB1500 500 mm Tall Microscope Body is designed to support setups for intrinsic signal imaging.

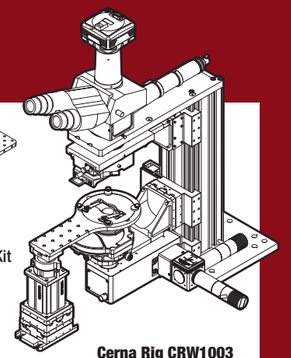

Cerna Rig CRW1003
This widefield imaging microscope includes a module for Dodt contrast imaging.

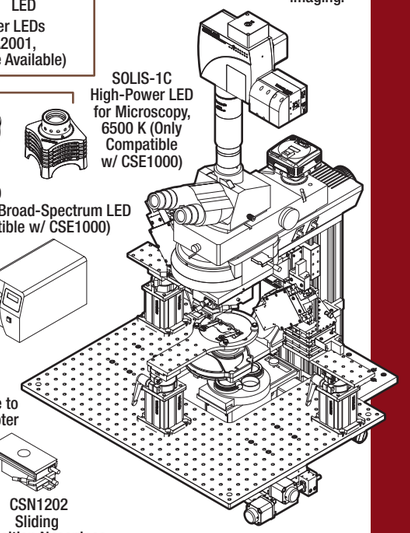

Cerna Rig CRE1005
With a platform for micromanipulators and double camera port, this microscope combines confocal and electrophysiology capabilities.

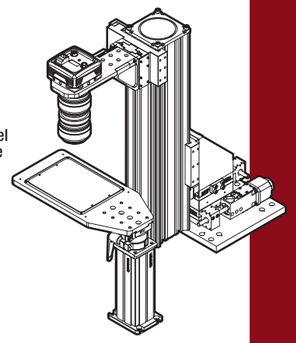

Cerna Rig CRF1002
This intrinsic imaging rig uses microscope movers to translate the field of view over a stationary sample.

WFA3140 DIC Slider 10X Plan Fluor
WFA3141 DIC Slider 16X
WFA3142 DIC Slider 20X Plan Fluor, Plan APO (N2 Dry)
WFA3143 DIC Slider 25X
WFA3145 DIC Slider 40X APO NIR (N2)
WFA3144 DIC Slider 40X Plan Fluor, Plan APO (Air), Plan APO (LWD 40X 1.15 NA)
WFA3146 DIC Slider 60X APO NIR (N2)

DIC Objective Slider (Choose One Compatible w/ Your Objective)

WFA3120 Visible Rotatable
WFA3121 IR Rotatable
WFA3130 N1 Dry (10X)
WFA3131 N2 Dry (16X - 100X)

DIC Condenser Polarizers
DIC Condenser Prisms
WFA3100 Polarizer Turret for VIS & IR Polarizers
Polarizers & Prisms for DIC Condenser
WFA3000 DIC Turret Adapter
DIC Analyzer
WFA3110 VIS & IR DIC Analyzer

SM2-Series Thread
WFA4110 Tube Lens in SM2 to D1N Dovetail Adapter
WFA4111 SM2 to D1N Dovetail Adapter

1501M-GE 1.4 MP Scientific Camera
4070M-GE 4 MP Scientific Camera
8050M-GE 8 MP Scientific Camera
340M-GE Fast Frame Rate Scientific Camera

WFA4100 1X Camera Tube, D1N Dovetail
WFA4101 0.75X Camera Tube, D1N Dovetail
WFA4102 0.5X Camera Tube, D1N Dovetail
WFA4105 1X Camera Tube, D2N Dovetail
WFA4106 0.7X Camera Tube, D2N Dovetail
WFA4107 1X Camera Tube, D5N Dovetail
WFA4108 0.7X Camera Tube, D5N Dovetail
WFA4109 0.5X Camera Tube, D5N Dovetail

Without Trinoculars
Inverted Trinoculars w/ Eyepieces & IR Filter (WFA4000) or w/out IR Filter (WFA4001)
Upright Image Trinoc w/ Eyepieces & IR Filter (WFA4002) or w/out IR Filter (WFA4003)

Step 2: Widefield Viewing Accessory

CSD1002 Double Port
CSA3000(/M) Breadboard Top
CSA3010(/M) Slim Breadboard Top
OPX2400(/M) Optical Path Conversion Kit

CSD1001 Variable Magnification Double Port
2SCM1-DC Double-Camera Mount
Used for Double-Camera Configurations and Confocal Rig

Step 3: Double Camera Port

DIY Paths
WFA2001 Epi-Illuminator
MCWHL5 Cold White LED
MWWHL4 Warm White LED
M470L3 Blue (470 nm) LED
M565L3 Lime (565 nm) LED
Mounted High-Power LEDs (Designed for WFA2001, Other Wavelengths are Available)

LEDs
SOLIS-1C High-Power LED for Microscopy, 6500 K (Only Compatible w/ CSE1000)
XCITE120LED High-Power, Broad-Spectrum LED (Only Compatible w/ CSE1000)

Widefield Illumination
CSE1000 Epi-Illuminator w/ Turret

Lamps
HPLS243 Solid State Plasma Light Source
XCITE200DC DC-Stabilized Fluorescence Light Source

Epi-Illumination Paths
CSA1100 Single Objective Arm
CSA2100 SM2, 60 mm Cage Arm
CSA1003 Cerna 60 mm Cage to D1N Dovetail Adapter

Step 4: Epi-Illumination Module

Step 5: Objective Holder

DIC-Compatible Nosepieces (Required for DIC in Step 14)
CSA1200 Sliding Nosepiece Arm
CSN1201 Single Objective Nosepiece
CSN1202 Sliding 2-Position Nosepiece
CSN1301 Manual 2-Position Nosepiece
CSN1302 Motorized 2-Position Nosepiece
CSA1300 Sliding Nosepiece Arm
M32 x 0.75 Nosepieces

Step 6: Piezo Stage for Fast Z-Stacks

Turret
CSA1400 Turret Mounting Arm
MOT1500 Manual 5-Position Turret
PFM450E 450 µm Travel Piezo Stage

Focus Module
ZFM2020 Focus Module for Edge-Mounted Arm
ZFM2030 Focus Module for Middle-Mounted Arm

Requires CSA1100, CSN1301, CSN1302, or CSN1201 from Step 5

CSA1051 Olympus Stage Adapter Arm
CSS2001 Manual Olympus XY Stage for Upright Microscope
CSS2000 Olympus Slide Holder

Requires:
- **CSE1000 from Step 4**
- **DIC-Compatible Nosepiece from Step 5**
- **WFA1000 Module from Step 13**

Step 14: DIC Components

DC4100 4 Channels 1 Mod Input
DC4104 4 Channels 4 Mod Inputs
LEDD1B 1 Channel

LED Drivers
WFA1010 VIS LED
WFA1020 IR LED
WFA1051 VIS & IR LEDs
Illumination Kits

WFA0150 Transmitted Light Module Adapter

Step 13: Transmitted Light Illumination

Trans-Illumination Modules and Accessories
WFA1000 Transmitted Light/DIC
WFA1100 Dodt/Gradient

Step 12: Condenser Mounting Module

ZFM2030 Focus Module for Middle-Mounted Arm

Step 11: Condenser

Mounting Arms
CSA2001 SM2 to D3N Dovetail Adapter
CSA2100 SM2 60 mm Cage Arm
BSA2000 Compact Condenser Mounting Arm
CSA2000 Condenser Mounting Arm
ZFM2020 Focus Module for Edge-Mounted Arm

CSC1001 FN-C LWD Condenser 0.78 NA
CSC1002 D-CUD Universal Condenser 0.9 NA
CSC1003 D-CUO Oil Condenser 1.4 NA

Step 1: Body Height
CEA1350 350 mm Tall Body
CEA1400 400 mm Tall Body
CEA1600 600 mm Tall Body
CFB1500 500 mm Tall Functional Imaging Body
CEA1500 500 mm Tall Body

Step 10: Translation Stage
PLS-XY 1" XY Stage
PLS-X 1" X-Axis Stage
PMP1000(/M) Manual XY Manipulator Platform
PMP-2XY(/M) XY Manipulator Platform

Step 9: Controller
MCM3001 3-Axis Controller for PLS and ZFM Stages
MCM3002 3-Axis Controller for MMP and PMP Stages
MMP-2XY XY Mover for Microscope Body

Step 8: Sample/Manipulator Stages
Rigid Stand Sample Holders
For Micromanipulators
For Slides
For Recording Chambers
Fixed Arms for Microscope Body
CSA1000 For MLS203-1 XY Stage
CSA1001 SM1, 30 mm Cage Arm
CSA1002 SM2, 60 mm Cage Arm
MLS203-1 Fast XY Scanning Stage
For MLS Inserts
MZS500-E Z-Axis Piezo Stage and Controller Kit

Step 7: Objective
N4X-PF N10X-PF N20X-PF N40X-PF N60X-PF
*Other Upon Request

THORLABS Imaging Systems | www.thorlabs.com