352230 f = 4.51 mm and 0.55 NA

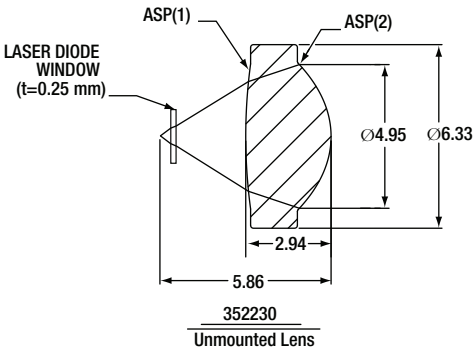

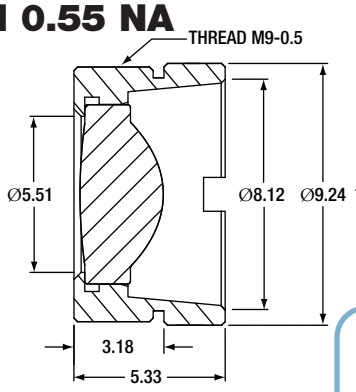

New 1.06 µm V-Coating

NEW versions

All Dimensions are in Millimeters
Please refer to our website for complete models and drawings.

Aspheric Coefficients

	R	k	A_4	A_6	A_8	A_{10}
ASP(1)	-18.73	–	–	–	–	–
ASP(2)	2.96	-0.3552361	-1.3285109E-03	-1.3974549E-04	-3.7686018E-06	-1.0129690E-06

Unmounted, AR-Coated Aspheric Lenses

ITEM#	$	£	€	RMB	DESCRIPTION
352230-A	$ 82.00	£ 56.90	€ 72,90	¥ 692.50	Lens, AR-Coated: 350 - 700 nm
352230-B	$ 82.00	£ 56.90	€ 72,90	¥ 692.50	Lens, AR-Coated: 650 - 1050 nm
352230-C	$ 82.00	£ 56.90	€ 72,90	¥ 692.50	Lens, AR-Coated: 1050 - 1620 nm
352230-1064	$ 82.00	£ 56.90	€ 72,90	¥ 692.50	Lens, AR-Coated: 1054 - 1074 nm

1.06 µm V-Coating

Mounted, AR-Coated Aspheric Lenses

ITEM#	$	£	€	RMB	DESCRIPTION
C230TME-A	$ 87.00	£ 60.40	€ 77,30	¥ 734.70	Mounted Lens, AR-Coated: 350 - 700 nm
C230TME-B	$ 87.00	£ 60.40	€ 77,30	¥ 734.70	Mounted Lens, AR-Coated: 650 - 1050 nm
C230TME-C	$ 87.00	£ 60.40	€ 77,30	¥ 734.70	Mounted Lens, AR-Coated: 1050 - 1620 nm
C230TME-1064	$ 87.00	£ 60.40	€ 77,30	¥ 734.70	Mounted Lens, AR-Coated: 1054 - 1074 nm

1.06 µm V-Coating

Geltech™ Molded Glass Aspheric Lens

Optical Design Specifications

- **Design Wavelength:** 780 nm
- **Numerical Aperture:** 0.55
- **Clear Aperture:** Ø4.95 mm
- **Effective Focal Length:** 4.51 mm
- **Magnification:** Infinite
- **Working Distance:** 2.92 mm
- **Laser Window Thickness:** 0.25 mm
- **Laser Window Material/Index:** N-BK7/1.517
- **RMS WFE (Axial @ 632.8 nm):*** <Diffraction Limit
- **Surface Quality:** 40-20 Scratch-Dig
- **Glass:** ECO-550

*Wavefront error is averaged over full aperture
Geltech™ lenses are manufactured by LightPath® Technologies

A230 f= 4.51 mm and 0.54 NA

NEW versions

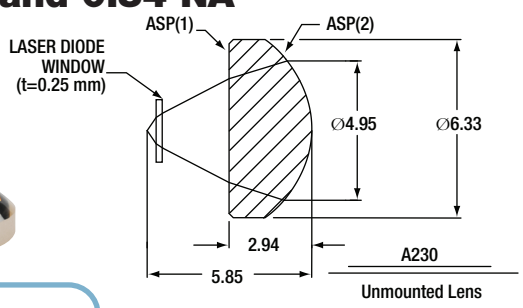

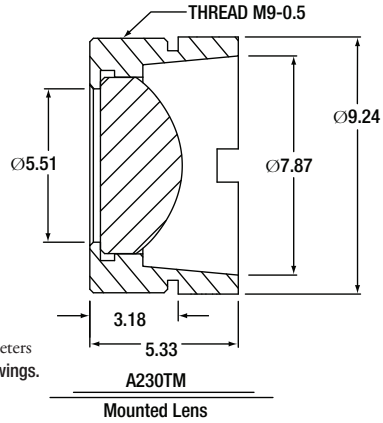

All Dimensions are in Millimeters
Please refer to our website for complete models and drawings.

Rochester Precision Molded Glass Aspheric Lens

Optical Design Specifications

- **Design Wavelength:** 780 nm
- **Numerical Aperture:** 0.54
- **Clear Aperture:** Ø4.95 mm
- **Effective Focal Length:** 4.51 mm
- **Magnification:** Infinite
- **Working Distance:** 2.91 mm
- **Laser Window Thickness:** 0.25 mm
- **Laser Window Material/Index:** N-BK7/1.517
- **RMS WFE (Typical):*** 0.050 Waves
- **Surface Quality:** 40-20 Scratch-Dig
- **Glass (Ohara):** S-NPH1

*Wavefront error is averaged over full aperture

Aspheric Coefficients

	R	k	A_4	A_6	A_8	A_{10}
ASP (1)	–	–	–	–	–	–
ASP (2)	3.50	0.390203	-1.4534147E-03	-8.6522294E-04	1.2701235E-04	-1.4090390E-05

Unmounted, AR-Coated Aspheric Lenses

ITEM#	$	£	€	RMB	DESCRIPTION
A230	$ 77.00	£ 53.40	€ 68,40	¥ 650.20	Lens, Uncoated
A230-A	$ 82.00	£ 56.90	€ 72,90	¥ 692.50	Lens, AR-Coated: 350 - 700 nm
A230-B	$ 82.00	£ 56.90	€ 72,90	¥ 692.50	Lens, AR-Coated: 650 - 1050 nm
A230-C	$ 82.00	£ 56.90	€ 72,90	¥ 692.50	Lens, AR-Coated: 1050 - 1620 nm

Mounted, AR-Coated Aspheric Lenses

ITEM#	$	£	€	RMB	DESCRIPTION
A230TM	$ 82.00	£ 56.90	€ 72,90	¥ 692.50	Mounted Lens, Uncoated
A230TM-A	$ 87.00	£ 60.40	€ 77,30	¥ 734.70	Mounted Lens, AR-Coated: 350 - 700 nm
A230TM-B	$ 87.00	£ 60.40	€ 77,30	¥ 734.70	Mounted Lens, AR-Coated: 650 - 1050 nm
A230TM-C	$ 87.00	£ 60.40	€ 77,30	¥ 734.70	Mounted Lens, AR-Coated: 1050 - 1620 nm

Please See Page 626 for AR Coating Curve